20V N-Channel MOSFET

1.Product Summary

$V_{(BR)DSS}$	$R_{DS(on)TYP}$	I_D
20V	15mΩ@4.5V	7A
	20mΩ@2.5V	

SOT-23

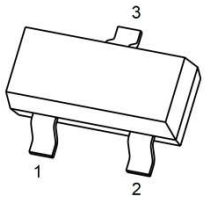

PIN1:GATE
PIN2:SOURCE
PIN3:DRAIN

Schematic diagram

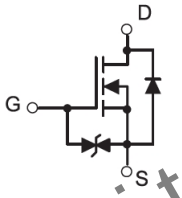

Marking

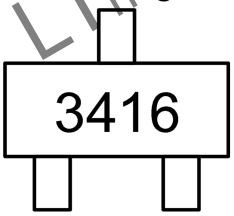

2.Features

- V_{DS} 20V
- I_D 7A
- $R_{DS(ON)}$(at V_{GS}=4.5V) ＜22 mohm
- $R_{DS(ON)}$(at V_{GS}=2.5V) ＜35 mohm
- Advanced Trench Technology
- Excellent $R_{DS(ON)}$ and Low Gate Charge
- Lead free product is acquired
- ESD Rating: HBM 2KV

3.Applications

- Load Switch
- PWM Application
- Power management

ASIC Micro-Electronics Limited

4.Absolute Maximum rating（T_A = 25℃ unless otherwise noted）

Parameter		Symbol	Value	Unit
Drain - Source Voltage		V_{DS}	20	V
Gate - Source Voltage		V_{GS}	±10	V
Continuous Drain Current [1,5]	T_A = 25℃	I_D	7	A
Pulsed Drain Current [2]		I_{DM}	30	A
Power Dissipation [4,5]		P_D	1.5	W
Thermal Resistance from Junction to Ambient		$R_{\theta JA}$	83	℃/W
Junction Temperature		T_J	150	℃
Storage Temperature		T_{STG}	-55~ +150	℃

5.Electrical Characteristics（T_A = 25℃ unless otherwise noted）

Parameter	Symbol	Test Condition	Min	Type	Max	Unit
Static Characteristics						
Drain - Source Breakdown Voltage	$V_{(BR)DSS}$	V_{GS}= 0V, I_D= 250μA	20			V
Zero Gate Voltage Drain Current	I_{DSS}	V_{DS}= 20V, V_{GS}= 0V			1	μA
Gate - Body Leakage Current	I_{GSS}	V_{GS}= ±10V, V_{DS}= 0V			±10	μA
Gate Threshold Voltage [3]	$V_{GS(th)}$	V_{DS}= V_{GS}, I_D= 250μA	0.4	0.7	1	V
Drain-source On-resistance [3]	$R_{DS(on)}$	V_{GS}= 4.5V, I_D= 5A		15	22	mΩ
		V_{GS}= 2.5V, I_D= 3A		20	35	
Dynamic Characteristics						
Input Capacitance	C_{iss}	V_{DS}= 10V, V_{GS}= 0V, f= 1.0MHz		545		pF
Output Capacitance	C_{oss}			103		
Reverse Transfer Capacitance	C_{rss}			90		
Switching Characteristics						
Total Gate Charge	Q_g	V_{DS}= 10V, I_D= 5A, V_{GS}= 4.5V		8		nC
Gate-source Charge	Q_{gs}			2.5		
Gate-drain Charge	Q_{gd}			3		
Turn-on Delay Time	$t_{d(on)}$	V_{DS}= 10V, R_L= 1.5Ω, R_{GEN}= 3Ω, V_{GS}= 5V		0.5		ns
Turn-on Rise Time	t_r			1		
Turn-off Delay Time	$t_{d(off)}$			12		
Turn-off Fall Time	t_f			4		
Source - Drain Diode Characteristics						
Diode Forward Voltage [3]	V_{SD}	V_{GS}= 0V, I_S= 5A			1.2	V

Notes :

1. The maximum current rating is limited by package.
2. Pulse Test : Pulse Width ≤ 10μs, duty cycle ≤ 1%.
3. Pulse Test : Pulse Width ≤ 300μs, duty cycle ≤ 2%.
4. The power dissipation P_D is limited by $T_{J(MAX)}$ = 150°C.
5. Device mounted on 1in^2 FR-4 board with 2oz. Copper, in a still air environment with T_A =25°C.

Asic Micro-Electronics Limited

6.Typical Characteristic

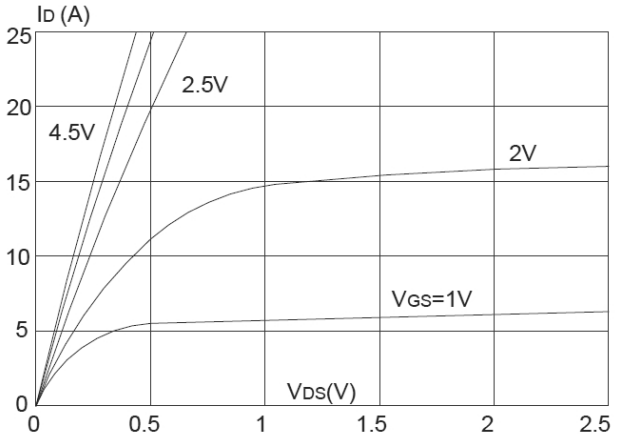

Output Characteristics

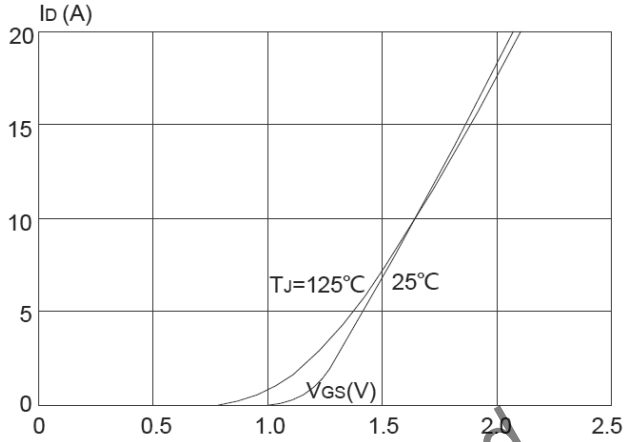

Transfer Characteristics

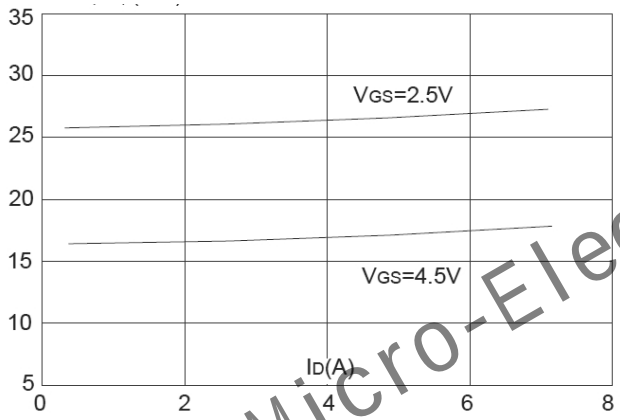

$R_{DS(ON)}$——I_D

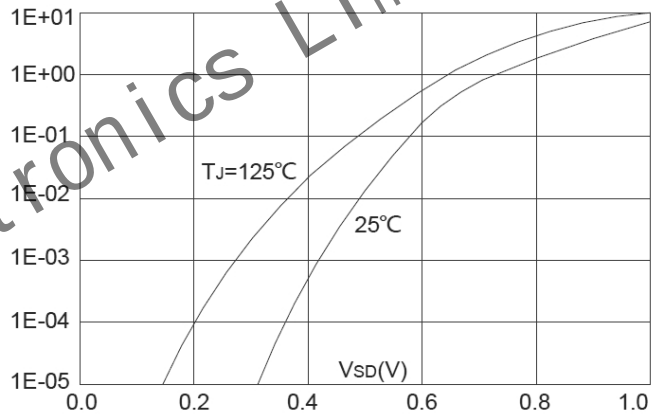

Body Diode Characteristics

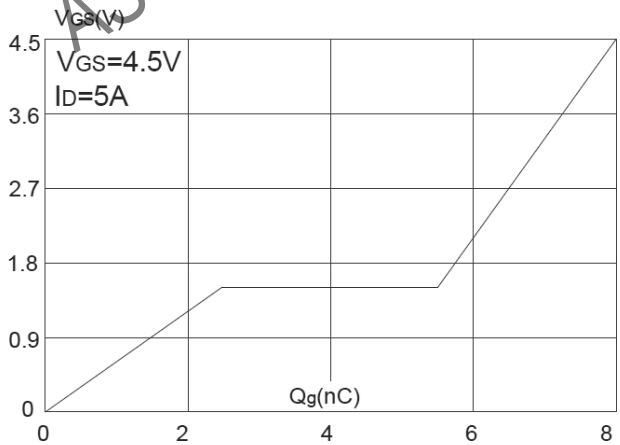

Gate Charge Characteristics

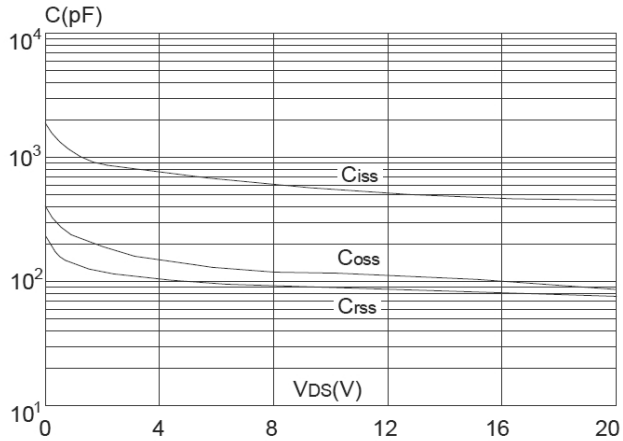

Capacitance Characteristics

ASIC Micro-Electronics Limited

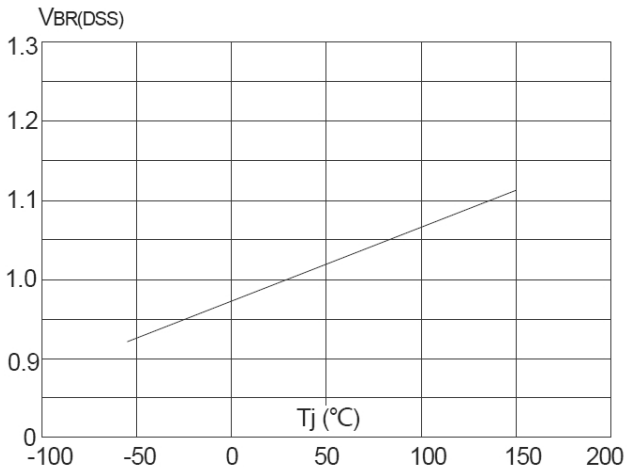

Normalized Breakdown Voltage vs. Junction Temperature

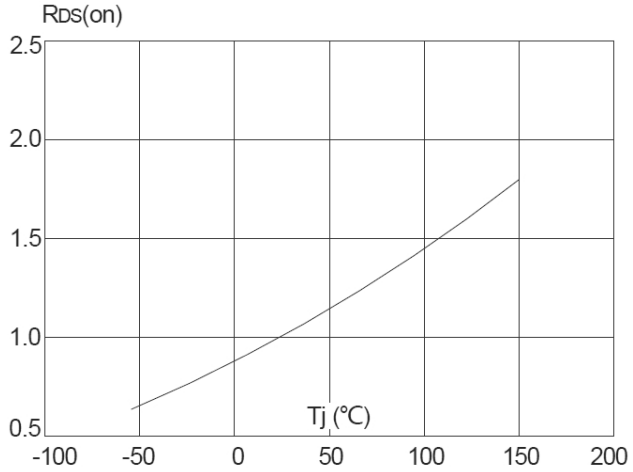

Normalized on Resistance vs. Junction Temperature

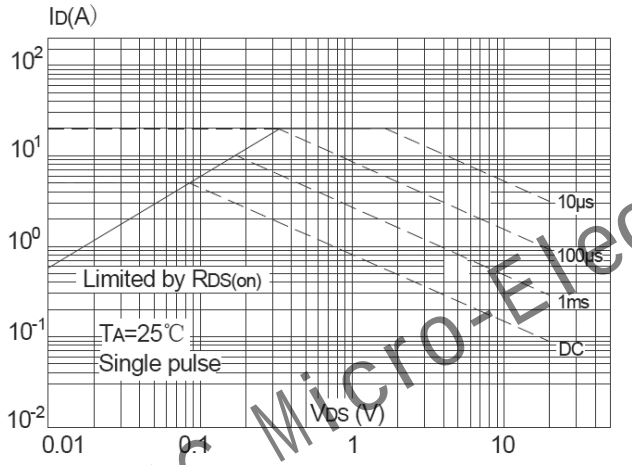

Maximum Safe Operating Area

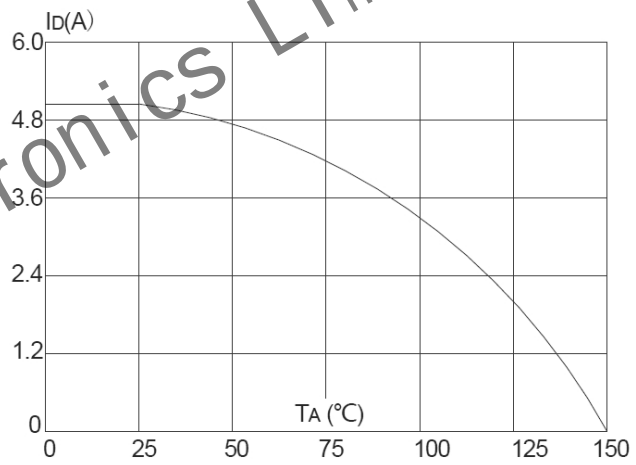

Maximum Continuous Drain Current vs. Ambient Temperature

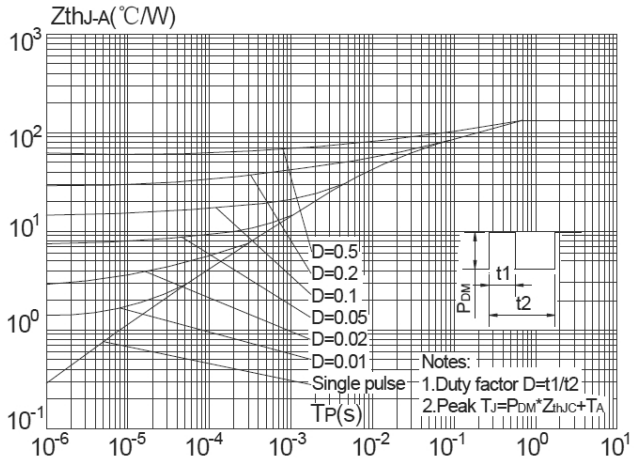

Maximum Effective Transient Thermal Impedance, Junction-to-Ambient

ASIC Micro-Electronics Limited

7.Dimension

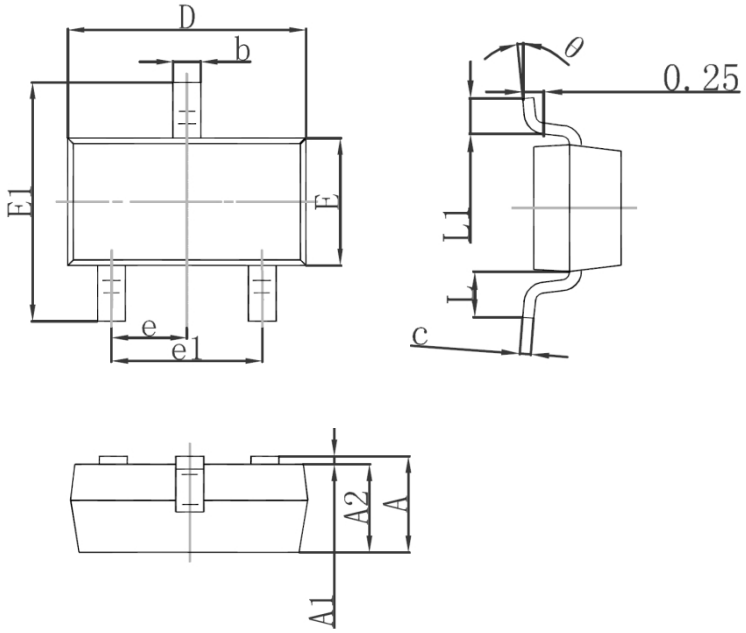

Symbol	Millimeters		Inches	
	Min	Max	Min	Max
A	0.900	1.150	0.035	0.045
A1	0.000	0.100	0.000	0.004
A2	0.900	1.050	0.035	0.041
b	0.300	0.500	0.012	0.020
c	0.080	0.150	0.003	0.006
D	2.800	3.000	0.110	0.118
E	1.200	1.400	0.047	0.055
E1	2.250	2.550	0.089	0.100
e	0.950 TYP		0.037 TYP	
e1	1.800	2.000	0.071	0.079
L	0.550 REF		0.022 REF	
L1	0.300	0.500	0.012	0.020
θ	0°	8°	0°	8°

Asic Micro-Electronics Limited

8.Recommended Land Pattern

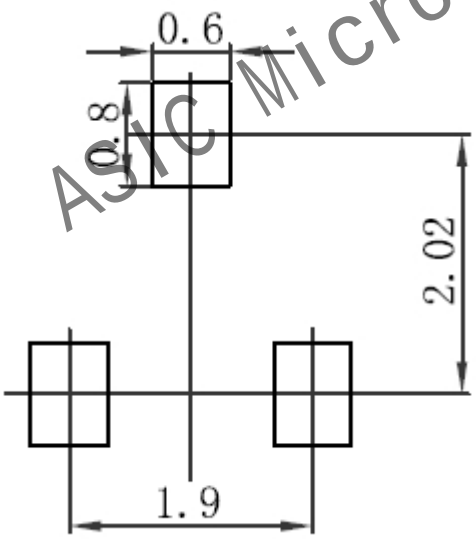

Note:

1. Controlling dimension: in millimeters
2. General tolerance: ±0.05mm
3. The pad layout is for reference only
4. Unit: mm

9.Tape and Reel

SOT-23 Embossed Carrier Tape

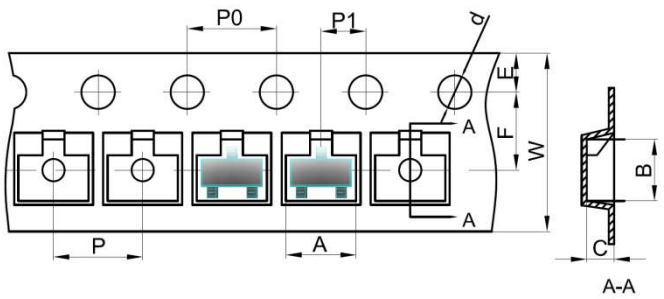

Packaging Description:

SOT-23 parts are shipped in tape. The carrier tape is made from a dissipative (carbon filled) polycarbonate resin. The cover tape is a multilayer film (Heat Activated Adhesive in nature) primarily composed of polyester film, adhesive layer, sealant, and anti-static sprayed agent. These reeled parts in standard option are shipped with 3,000 units per 7" or 17.8cm diameter reel. The reels are clear in color and is made of polystyrene plastic (anti-static coated).

Dimensions are in millimeter										
Pkg type	A	B	C	d	E	F	P0	P	P1	W
SOT-23	3.15	2.77	1.22	Ø1.50	1.75	3.50	4.00	4.00	2.00	8.00

ASIC Micro-Electronics Limited

SOT-23 Reel

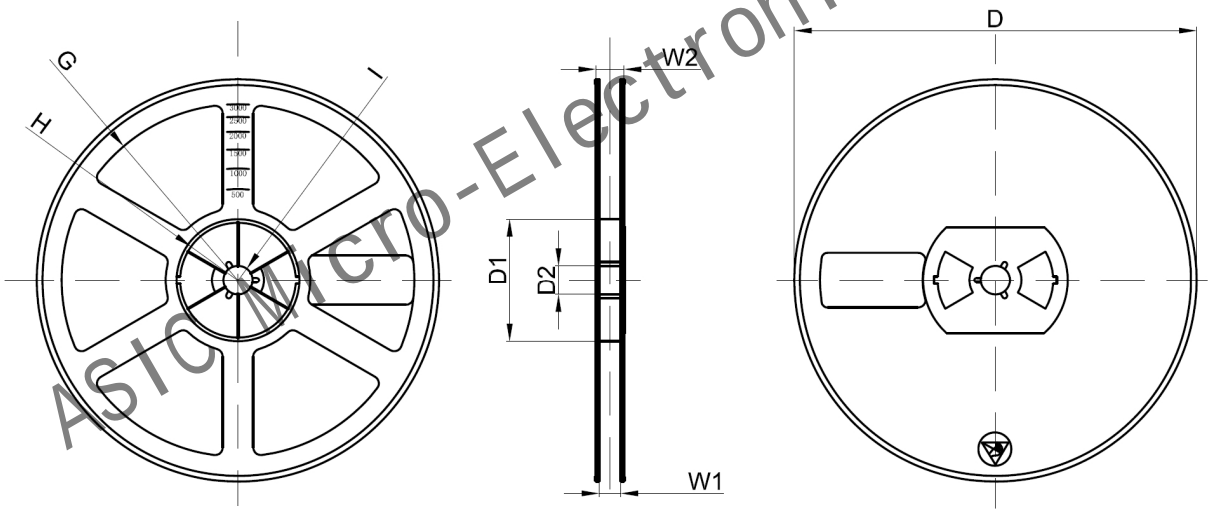

Dimensions are in millimeter								
Reel Option	D	D1	D2	G	H	I	W1	W2
7"Dia	Ø178.00	54.40	13.00	R78.00	R25.60	R6.50	9.50	12.30

REEL	Reel Size	Box	Box Size(mm)	Carton	Carton Size(mm)	G.W.(kg)
3000 pcs	7 inch	45,000 pcs	203×203×195	180,000 pcs	438×438×220	

DISCLAIMER

ASIC PROVIDES TECHNICAL AND RELIABILITY DATA (INCLUDING DATASHEETS), DESIGN RESOURCES (INCLUDING REFERENCE DESIGNS), APPLICATION OR OTHER DESIGN ADVICE, SAFETY INFORMATION, AND OTHER RESOURCES “AS IS” AND WITH ALL FAULTS, AND DISCLAIMS ALL WARRANTIES, EXPRESS AND IMPLIED, INCLUDING WITHOUT LIMITATION ANY IMPLIED WARRANTIES OF MERCHANTABILITY, FITNESS FOR A PARTICULAR PURPOSE OR NON-INFRINGEMENT OF THIRD PARTY INTELLECTUAL PROPERTY RIGHTS.

These resources are intended for skilled developers designing with ASIC products. You are solely responsible for
(1) selecting the appropriate ASIC products for your application,
(2) designing, validating and testing your application
(3) ensuring your application meets applicable standards, and any other safety, security, or other requirements. These resources are subject to change without notice. ASIC grants you permission to use these resources only for development of an application that uses the ASIC products described in the resource. Other reproduction and display of these resources are prohibited. No license is granted to any other ASIC intellectual property right or to any third party intellectual property right. ASIC disclaims responsibility for, and you will fully indemnify ASIC and its representatives against, any claims, damages, costs, losses, and liabilities arising out of your use of these resources. ASIC’s products are provided subject to ASIC’s Terms of Sale or other applicable terms available either on www.asicm.co or provided in conjunction withsuch ASIC products. ASIC’s provision of these resources does not expand or otherwise alter ASIC’s applicablewarranties or warranty disclaimers for ASIC products

ASIC Micro-Electronics Limited